PRODUCTIONS UNLIMITED, INC.

Tdeck+®
Stage Decks

About Tdeck+®

Tdeck+® is a modular and highly customizable stage deck solution for onstage applications.

- Tdeck+® is available for purchase or rental.
- Decks bolt together out of components to provide sizes from 1'x1' to 4'x8' in 1'-0" increments.
- A variety of finishes are available.
- Modular design can be configured into endless possibilities.
- Tdeck+® is available with standard 3/4" covers or you can supply your own plywood.
- Legs can be spaced as far apart as 8 ft. within the platform frame.
- Sch. 40 1-1/2" pipe legs are available in fixed height, adjustable height, or telescoping and can be cut to any standard or custom length.
- A wide variety of accessories and fittings are available for mounting legs, casters, etc.
- Flat pack shipping saves on transportation costs.
- The live load rating is 150 psf (732 kg/m²).
- The total weight of 4' x 8' Tdeck with 3/4" plywood surface is 180 lbs (81.65 kg).
- For weights and dimensions on all pieces, see our Tdeck+® catalog.

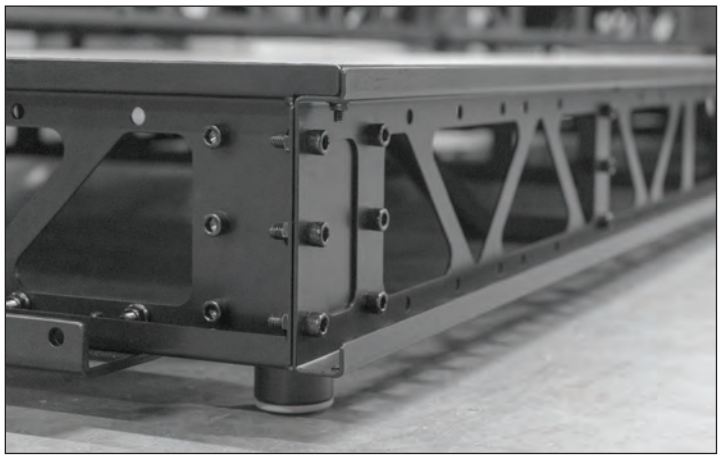

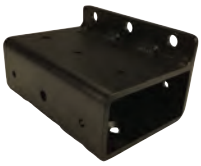

U.S. Patents 9,631,385 & 10,221,581
Canadian Patent 2,933,878

PRODUCTIONS UNLIMITED, INC.

Tdeck+®
Stage Decks

Expanding Tdeck+®

Marriage Brackets are used to connect multiple decks together, strengthening the system and reducing the number of legs required [see table below].

Brackets will attach to the Rim Joists and End Frames.

Requires:

- 3/8”-16 x 1” socket head screws
- 3/8”-16 x 1” flat cap socket screws
- 3/8”-16 flange nuts

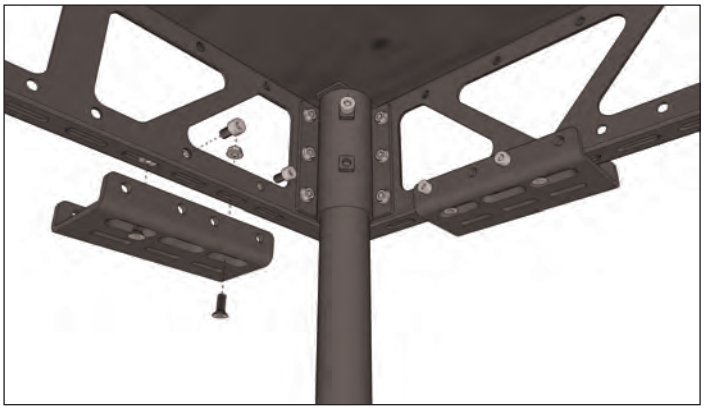

Leg layout for joining decks with marriage brackets

(4x8 decks shown, interior joists required, but not drawn in this example)

= corner bracket with leg = corner bracket no leg = marriage bracket

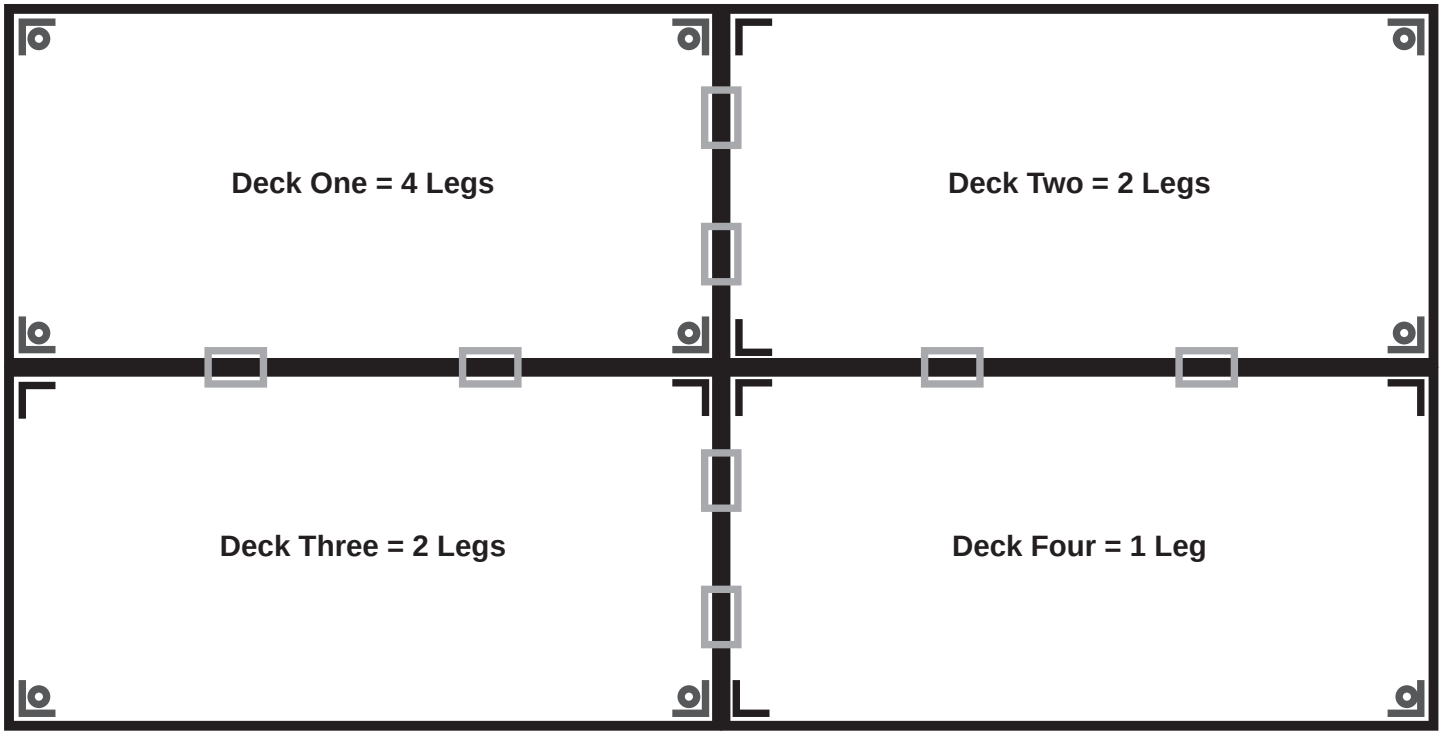

PRODUCTIONS UNLIMITED, INC.
www.productionsunlimitedinc.com
Toll Free: 844.579.7455